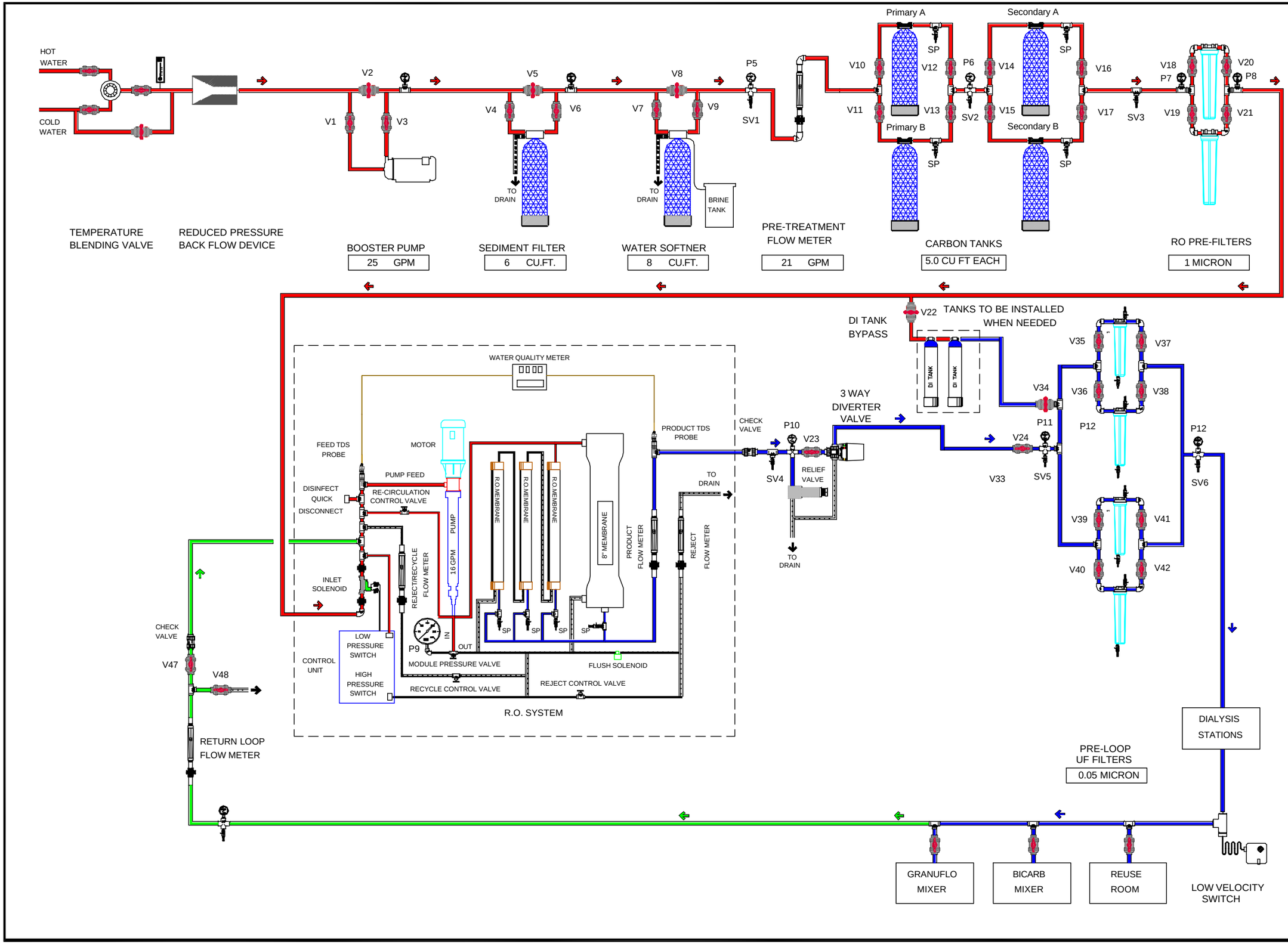

Flow Diagram

SCALE: none

DRAWN BY: LR

ACAD FILE : flow diagram

DATE: 1/20/03

REVISIONS DATE:

G.E.M. Water Systems, Int'l. LLC
DESIGNER AND MANUFACTURERS OF REVERSE OSMOSIS SYSTEMS
6351 ORANGETHORPE AVE, BUENA PARK, CA 90620 USA
(800) 755-1707 FAX (714) 736-9402
WEBSITE www.gemwater.com